PHASE	NUMBER
1	9
7	1
10	2
11	1

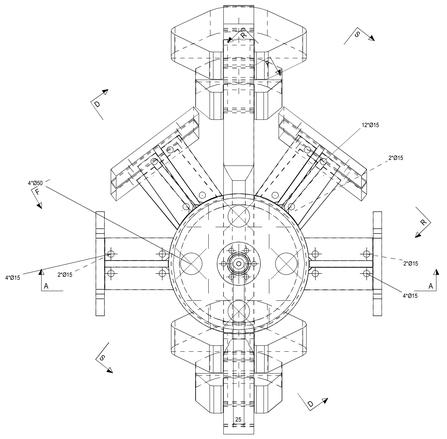

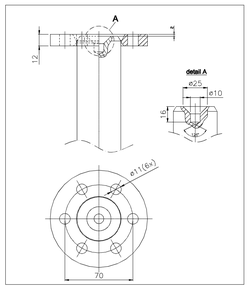

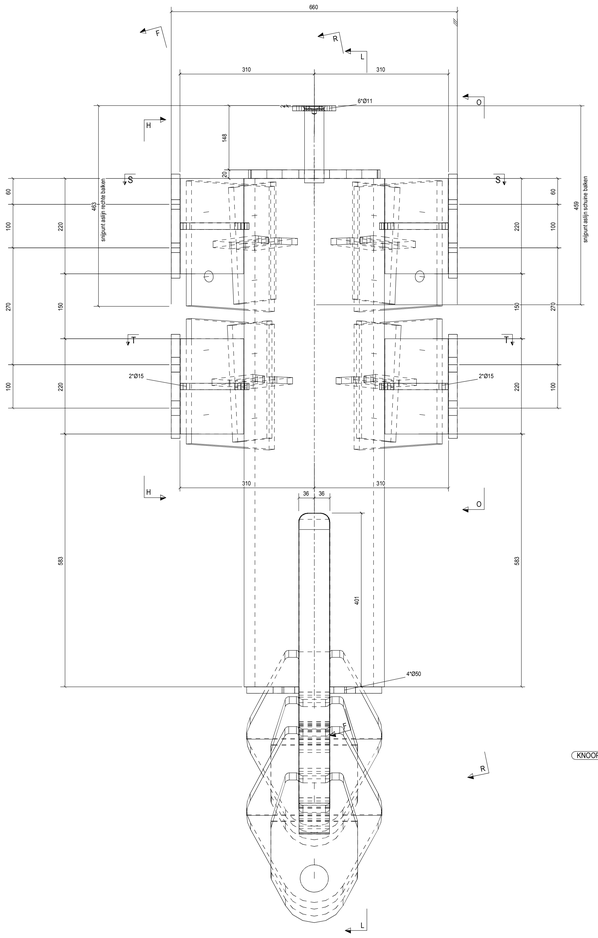

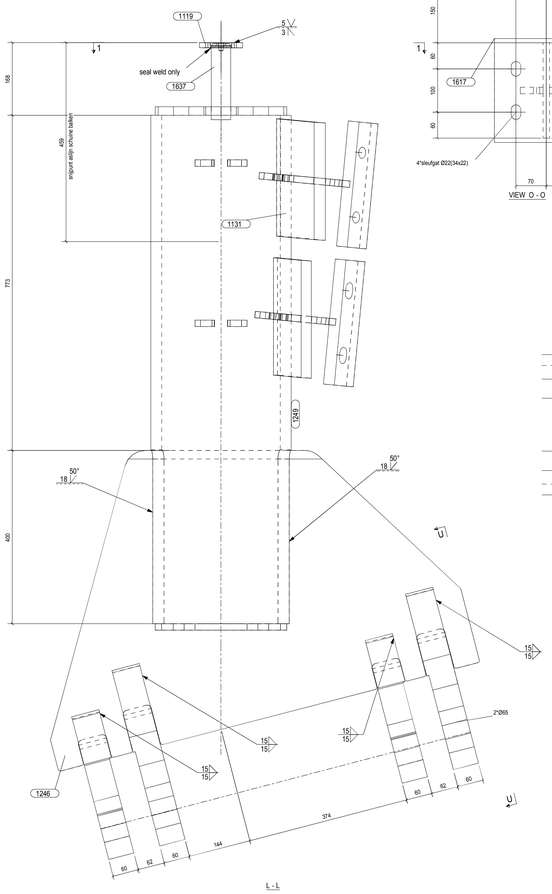

L - L

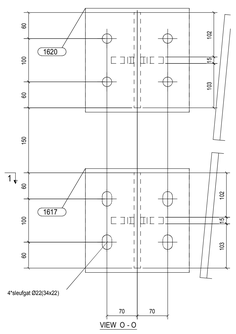

VIEW O - O

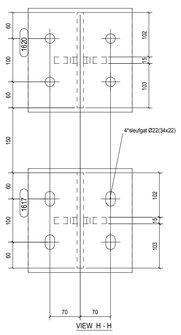

VIEW H - H

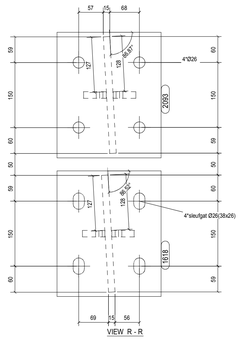

VIEW R - R

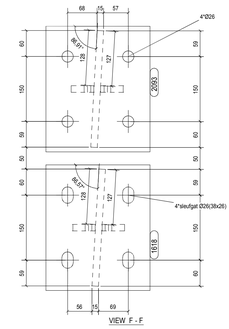

VIEW F - F

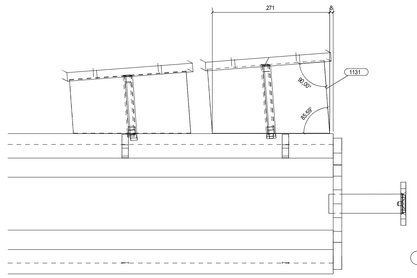

VIEW V - V

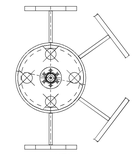

VIEW 1 - 1

SHOP MATERIAL LIST FOR 1 ASSEMBLY					
Mark: 29				Number: 4	
Part	Profile	Material	Number	Length (mm)	Weight (kg)
29	D32	EXISTING_STE	1	699	0.0
SHOP MATERIAL LIST FOR 1 ASSEMBLY					
Mark: 32				Number: 4	
Part	Profile	Material	Number	Length (mm)	Weight (kg)
32	D64	42 Cr Mo	1	252	6.1
SHOP MATERIAL LIST FOR 1 ASSEMBLY					
Mark: 527				Number: 3	
Part	Profile	Material	Number	Length (mm)	Weight (kg)
527	PL60*340.4	S355J2	1	510	42.8
SHOP MATERIAL LIST FOR 1 ASSEMBLY					
Mark: EXIST79				Number: 1	
Part	Profile	Material	Number	Length (mm)	Weight (kg)
EXIST79	PL40*894.9	EXISTING_STE	1	1275	0.0
SHOP MATERIAL LIST FOR 1 ASSEMBLY					
Mark: KNOOP54				Number: 1	
Part	Profile	Material	Number	Length (mm)	Weight (kg)
1119	PD100*27	S355J2	1	12	0.6
1130	STRIP15*220	S355J2	3	146	11.4
1131	PL15*168.7	S355J2	2	270	10.1
1132	PL16*144	S355J2	2	270	8.5
1224	PL15*120.9	S355J2	1	304	3.2
1224	PL15*121	S355J2	1	304	3.2
1245	PL20*303.9	S355J2	1	304	11.3
1246	PL70*668.8	S355K2	1	1004	250.7
1249	B323.925	S355J2H	1	1173	214.1
1617	PL20*240	S355J2	2	240	18.1
1618	PL20*240	S355J2	2	290	21.9
1620	PL20*240	S355J2	2	240	18.1
1625	15*51.6	S355J2	1	145	0.8
1626	15*51.6	S355J2	1	149	0.8
1627	15*51.6	S355J2	1	146	0.8
1628	15*51.6	S355J2	1	148	0.8
1637	D45	S355J2	1	176	2.1
1638	15*52.1	S355J2	2	172	2.0
1639	15*52.1	S355J2	2	170	2.0
1641	D0.5	DUMMY	1	1356	0.0
1642	D0.5	DUMMY	1	660	0.0
1643	D0.5	DUMMY	2	330	0.0
1675	15*51.5	S355J2	1	159	0.9
1675	15*52.5	S355J2	2	158	1.9
1675	15*52.5	S355J2	5	159	4.7
1706	EL_KEGEL25*25*10*10	DUMMY	1	8	0.0
1757	D10	DUMMY	1	9	0.0
1758	EL_KEGEL10*10*0.1*0.	DUMMY	1	3	0.0
1948	PL65*295.8	S355K2	2	407	80.7
1949	PL60*253.1	S355K2	2	338	50.0
2093	PL20*240	S355J2	2	290	21.9
KNOOP54	STRIP15*220	S355J2	1	146	3.8
				Total weight for 1 assembly	793.0

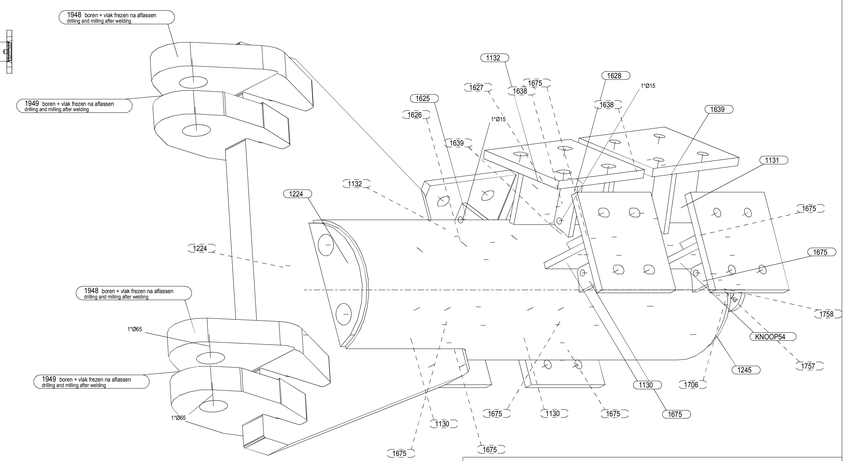
1948 boren + vlak frezen na aflassen
drilling and milling after welding
1949 boren + vlak frezen na aflassen
drilling and milling after welding
1948 boren + vlak frezen na aflassen
drilling and milling after welding
1949 boren + vlak frezen na aflassen
drilling and milling after welding
1132
1675
1628
1627
1638
1625
1626
1639
1639
1131
1224
1224
1675
1676
1758
KNOOP54
1757
1245
1130
1706
1675
1130
1675
1675
1130
1675
1675
1675